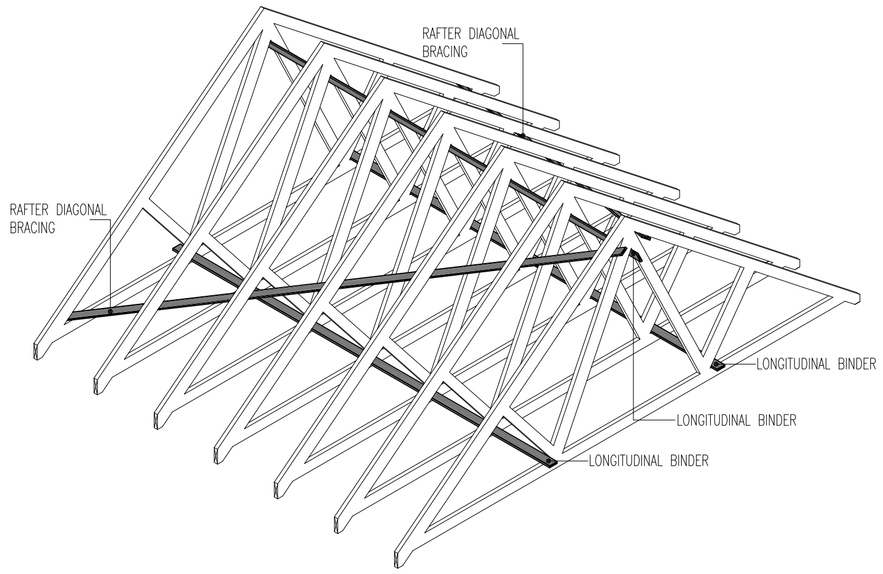

MINIMUM STANDARD BRACING (TRUSS ROOF)

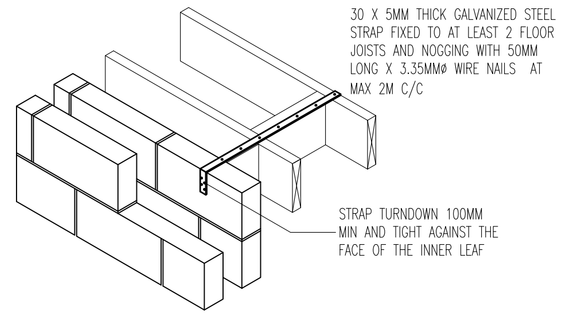

FIRST FLOOR/EXTERNAL WALL STRAPPING (CEILING LEVEL)

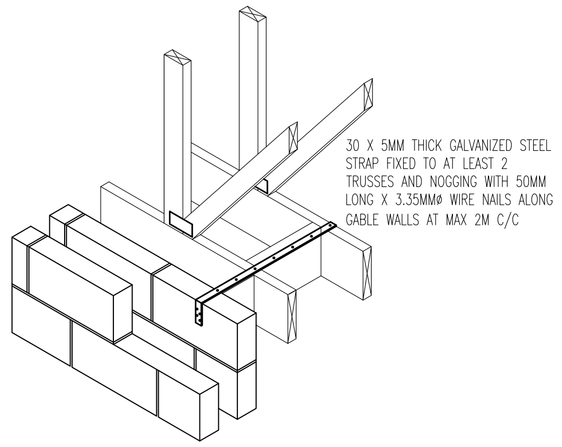

TRUSS ROOF/GABLE WALL STRAPPING (CEILING LEVEL)

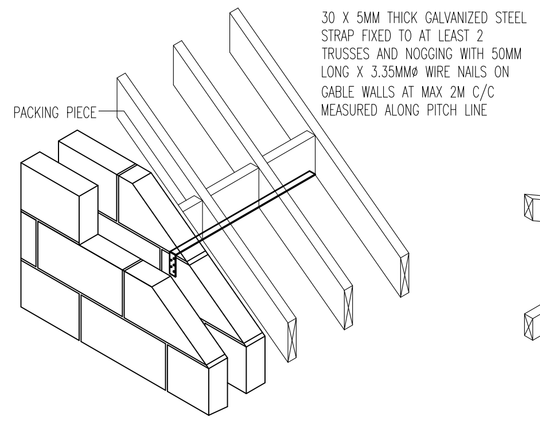

TRUSS ROOF/GABLE WALL STRAPPING (ROOF LEVEL)

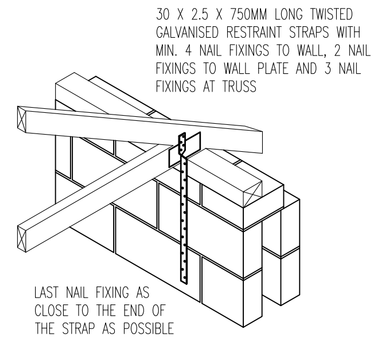

HOLDINGS DOWN STRAPS (TRUSS ROOF)

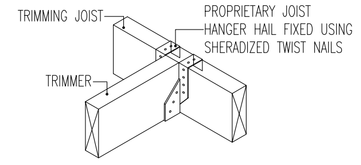

DETAIL A

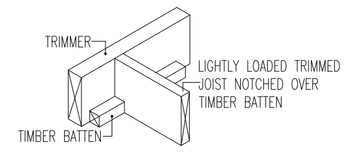

DETAIL B

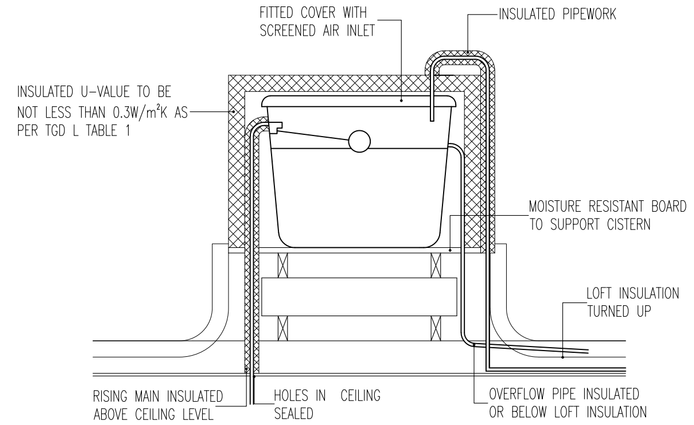

WATER CISTERN LAGGING

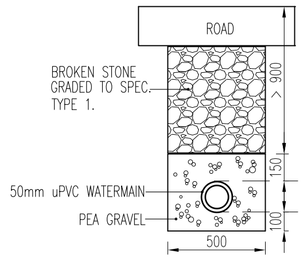

WATERMAIN BEDDING.

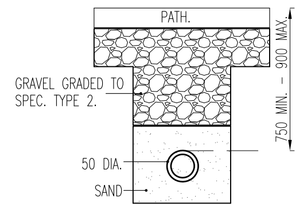

WATERMAIN BEDDING.

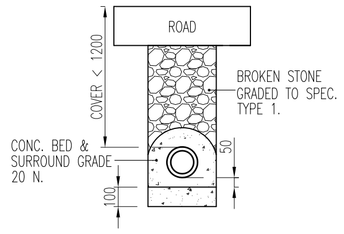

uPVC SEWER PIPE.

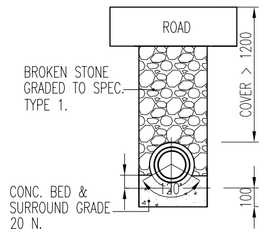

uPVC. SEWER PIPE.

LIMITS OF COVER IN METRES FOR STANDARD STRENGTH RIGID PIPES IN ANY WIDTH OF TRENCH								
BEDDING CLASS		FIELDS & GARDENS		LIGHT TRAFFIC ROAD		HEAVY TRAFFIC ROADS		
MIN.	MAX	MIN.	MAX.	MIN.	MAX.	MIN.	MAX	
D OR N		0.4	4.2	0.7	4.1	0.7	3.7	
F		0.3	5.8	0.5	5.8	0.5	5.5	
B		0.3	7.4	0.4	7.4	0.4	7.2	
D OR N		0.6	2.7	1.1	2.5	–	–	
F		0.6	3.9	0.7	3.8	0.7	3.3	
B		0.6	5.0	0.6	5.0	0.6	4.6	

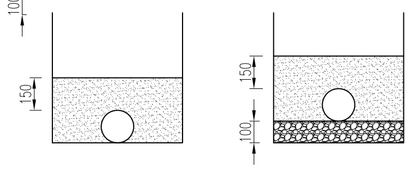

CLASS D:
HIGH STANDARD OF WORKMANSHIP REQUIRED NOT TO BE USED UNLESS ACCURATE HAND TRIMMING BY SHOVEL IS POSSIBLE

CLASS N:
WHERE ACCURATE HAND TRIMMING IS NOT POSSIBLE CLASS N IS AN ALTERNATIVE TO CLASS D

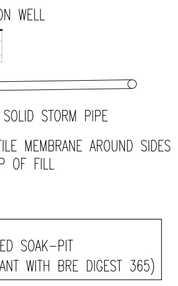

NOTE:
PROPOSED SOAK-PIT
(COMPLIANT WITH BRE DIGEST 365)

SOAKAWAY BUILD UP
SCALE 1:50

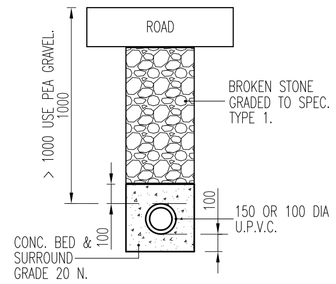

P.V.C. FOUL/STORM DRAIN.

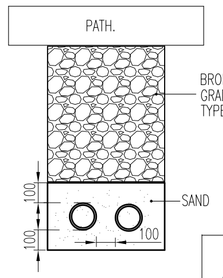

P.V.C. SERVICE

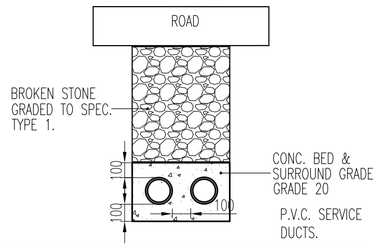

PIPE BEDDING DETAILS.

SELECTED FILL FREE FROM STONES LARGE THAN 40MM, LUMPS OF CLAY OVER 100MM, TIMBER, FROZEN MATERIAL AND VEGETABLE MATTER.

GRANULAR MATERIAL SHOULD BE 10MM AGGREGATE CONFORMING TO IS 5:1990 HAVING A COMPACTION FACTOR OF 0.2 OR LESS WHEN TESTED IN ACCORDANCE WITH BS 8310:1985 APPENDIX D.

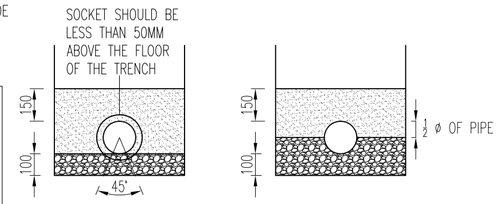

CLASS F:
GENERALLY SUITABLE IN ALL SOIL CONDITIONS

CLASS B:
GENERALLY SUITABLE IN ALL SOIL CONDITIONS

ADDITIONAL NOTES:

1. THIS DRAWING IS TO BE READ IN CONJUNCTION WITH ALL OTHER APPROPRIATE DRAWINGS AND SPECIFICATIONS.
2. DO NOT SCALE, USED FIGURED DIMENSIONS ONLY.
3. THE CONTRACTOR IS TO CHECK ALL DIMENSIONS ON SITE PRIOR TO COMMENCEMENT OF THE WORKS AND ADVICE THE CONSULTANT IMMEDIATELY OF ANY DISCREPANCIES.
4. ALL WORKS ARE TO BE CARRIED OUT IN COMPLIANCE WITH CURRENT BUILDING REGULATIONS, LOCAL AUTHORITY REQUIREMENTS AND GOOD PRACTICE.
5. THE CONTRACTOR IS TO ADVISE THE CONSULTANT IN A TIMELY MANNER OF ANY ADDITIONAL INFORMATION OR DETAILS REQUIRED TO CONSTRUCT THE WORKS.
6. ALL EXISTING LEVELS ARE TO BE CONFIRMED ON SITE.
7. REINFORCED RADON MEMBRANE TO BE INSTALLED TO MANUFACTURERS SPECIFICATION AND CURRENT BUILDING REGULATIONS. FOOTINGS FOR INTERNAL BLOCK WALLS TO INCORPORATE GAPS TO ALLOW POSSIBLE RADON TO PASS THROUGH.

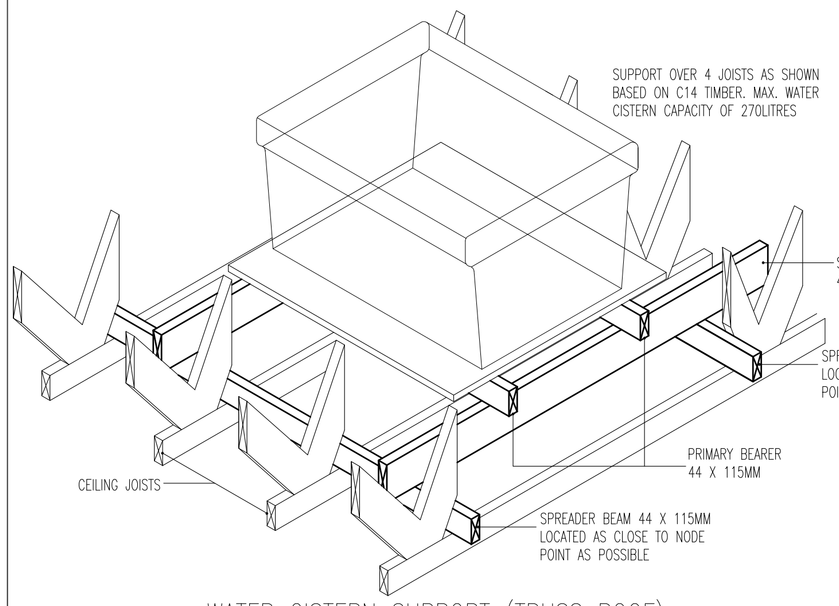

WATER CISTERN SUPPORT (TRUSS ROOF)

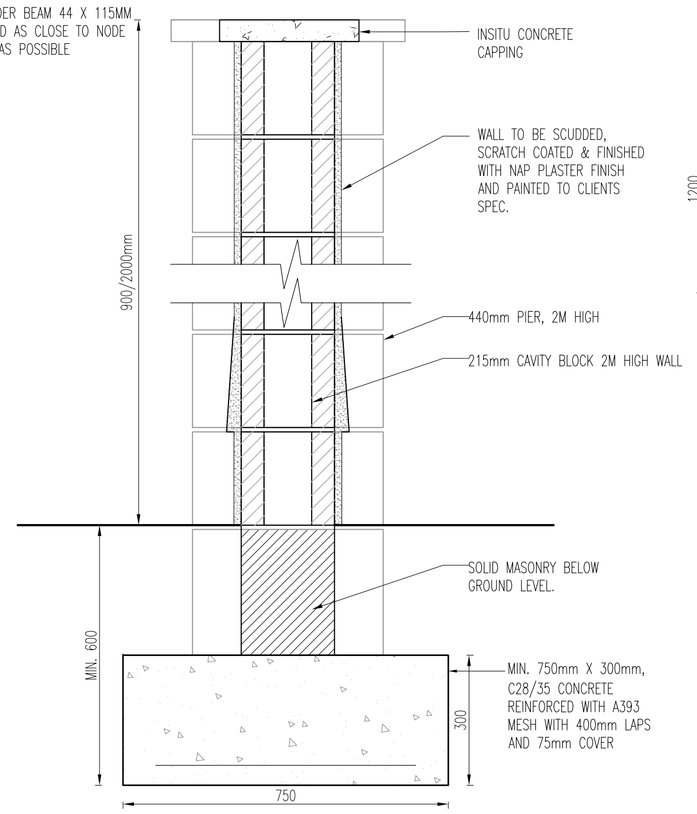

BOUNDARY WALL DETAIL
SCALE: 1:10

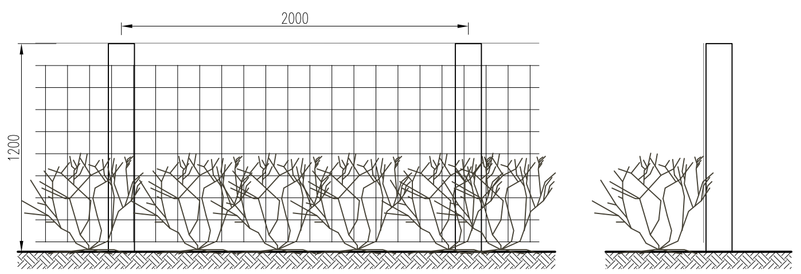

BOUNDARY FENCE DETAIL
SCALE: 1:25

STOCK PROOF FENCE APPROX. 126M-100MM PRESSURE TREATED WOODEN POST, 1.8M LONG (1.2m ABOVE GROUND LEVEL), GALVANISED MESH TO BE PROVIDED THROUGHOUT, MAX. 100mm SQUARE SPACINGS. STRAINER POSTS TO CORNERS, 3mm WIRE TO TOP STRAND. WHITETHORN HEDGING TO BE PLANTED TO THE INSIDE OF THE FENCE AT 450mm CENTRES IN STAGGERED LINES.

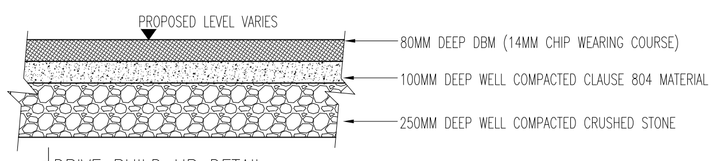

DRIVE BUILD UP DETAIL
SCALE: 1:20

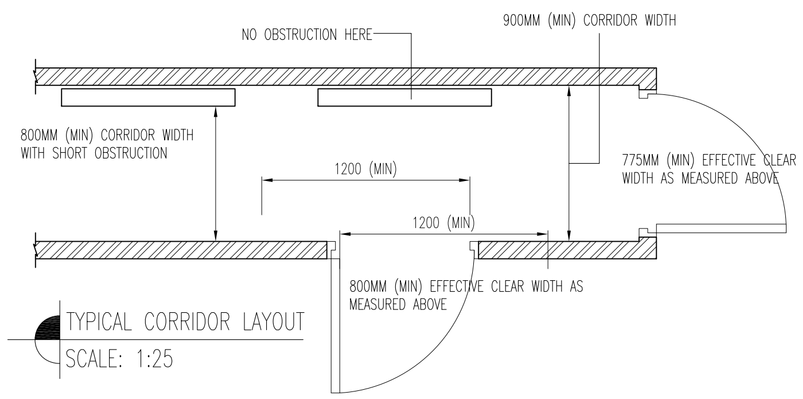

TYPICAL CORRIDOR LAYOUT
SCALE: 1:25

ESB CONNECTION DETAILS

1. TO COMFORTABLY ACCEPT THE CABINET, BUILDERS SHOULD PROVIDE AN OPENING OF: 606MM (H) X 402(W) X 155 (D).
2. ENSURE THAT THE DOOR HANGS SO AS TO ALLOW THE LATCH TO FALL INTO A CLOSED POSITION.
3. THE INSTALLATION OF THE METER CABINET AND HOCKEY STICK DUCT INTO THE WALL AND CAVITY MUST BE IN ACCORDANCE WITH BEST BUILDING PRACTICES (I.E. CIF STANDARDS). THE HOCKEY STICK DUCT MUST BE BROUGHT UP THE CAVITY INTO THE CABINET AT FOUNDATION CONSTRUCTION STAGE.
4. IF THE HOUSE DOES NOT HAVE ANY CAVITY WALLS, THE DUCT MUST BE EMBEDDED IN THE WALL, EITHER BY BUILDING IT INTO THE WALL OR CHANNELLING THE WALL.

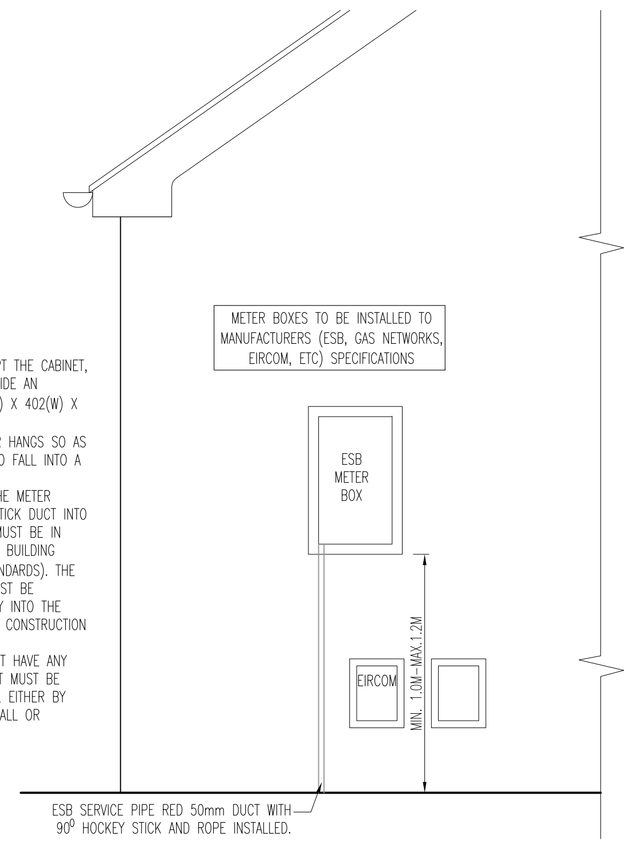

ESB BOX DETAIL
SCALE: 1:20

DO NOT SCALE FROM THIS DRAWING. USE FIGURED DIMENSIONS IN ALL CASES VERIFY DIMENSIONS ON SITE AND REPORT ANY DISCREPANCIES TO THE ENGINEERS IMMEDIATELY. THIS DRAWING IS TO BE READ IN CONJUNCTION WITH THE ENGINEERS SPECIFICATION. THIS DRAWING IS COPYRIGHT AND MAY ONLY BE REPRODUCED WITH THE ENGINEERS PERMISSION.

Rev.No.	Revision/Issue	Initials

AOCA ENGINEERING CONSULTANTS
Portlaoise Office
Lismard House,
Timahoe Road,
Portlaoise,
Co. Laois.
T:+353 (057)8663244
Dublin Office
Unit E6,
Centrepoint Business Park,
Oak Drive,
Dublin 12.
T:+353 (01) 4243035
Web: www.aoca.ie
Email:info@aoca.ie

Client: Laois County Council

Address: Coolroe, Ballybrittas, Co Laois.

Title: Details Sheet 2 of 2

Scale: As Shown	Issue Type: Part VIII Planning
Drawn By: D.C	Revision No: 0
Checked By: D.M	Sheet Size: A1
Date: 28.05.2020	Area:
DWG No: 19-021-P-005	Issued By: Portlaoise