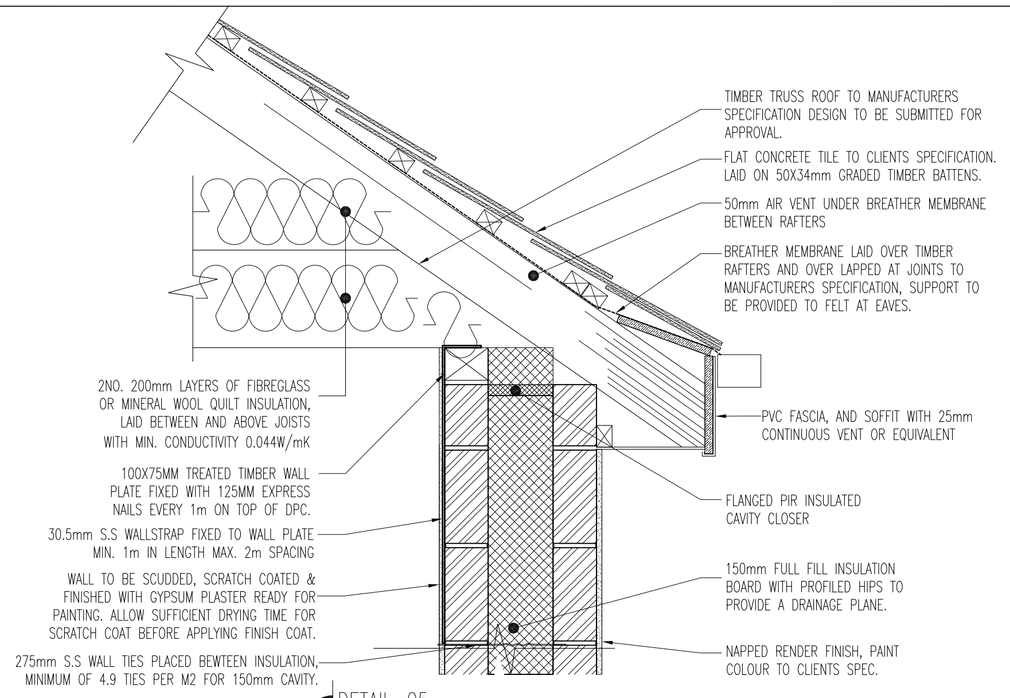

DETAIL-05
SCALE: 1:10

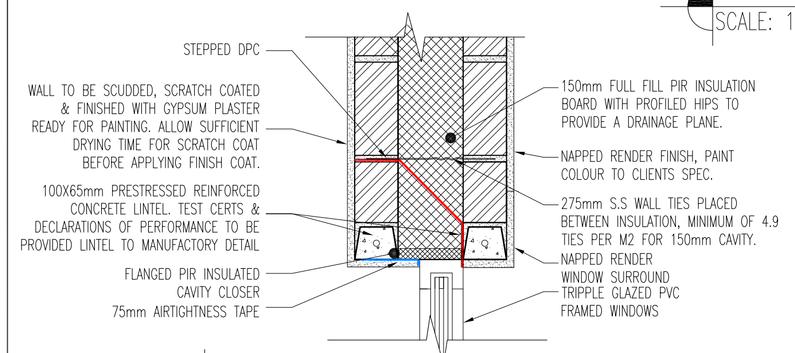

DETAIL-03 (WINDOWS LESS THAN 1.2M)
SCALE: 1:10

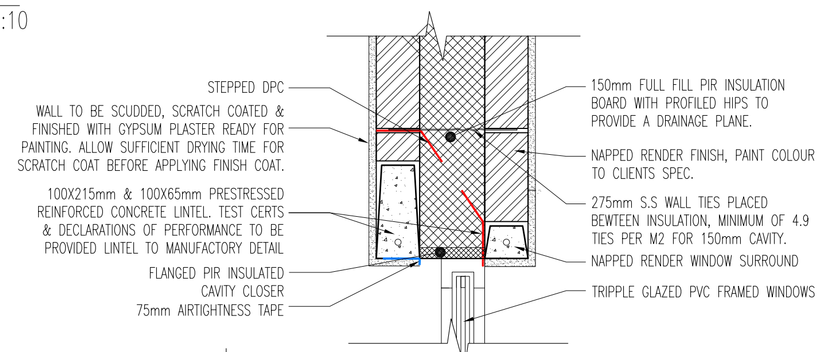

DETAIL-04 (WINDOWS GREATER THAN 1.2M)
SCALE: 1:10

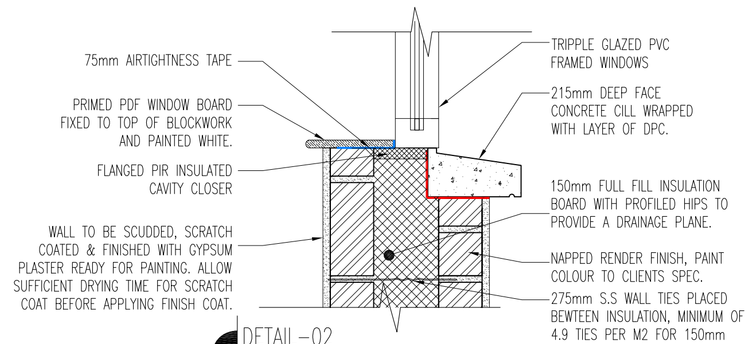

DETAIL-02
SCALE: 1:10

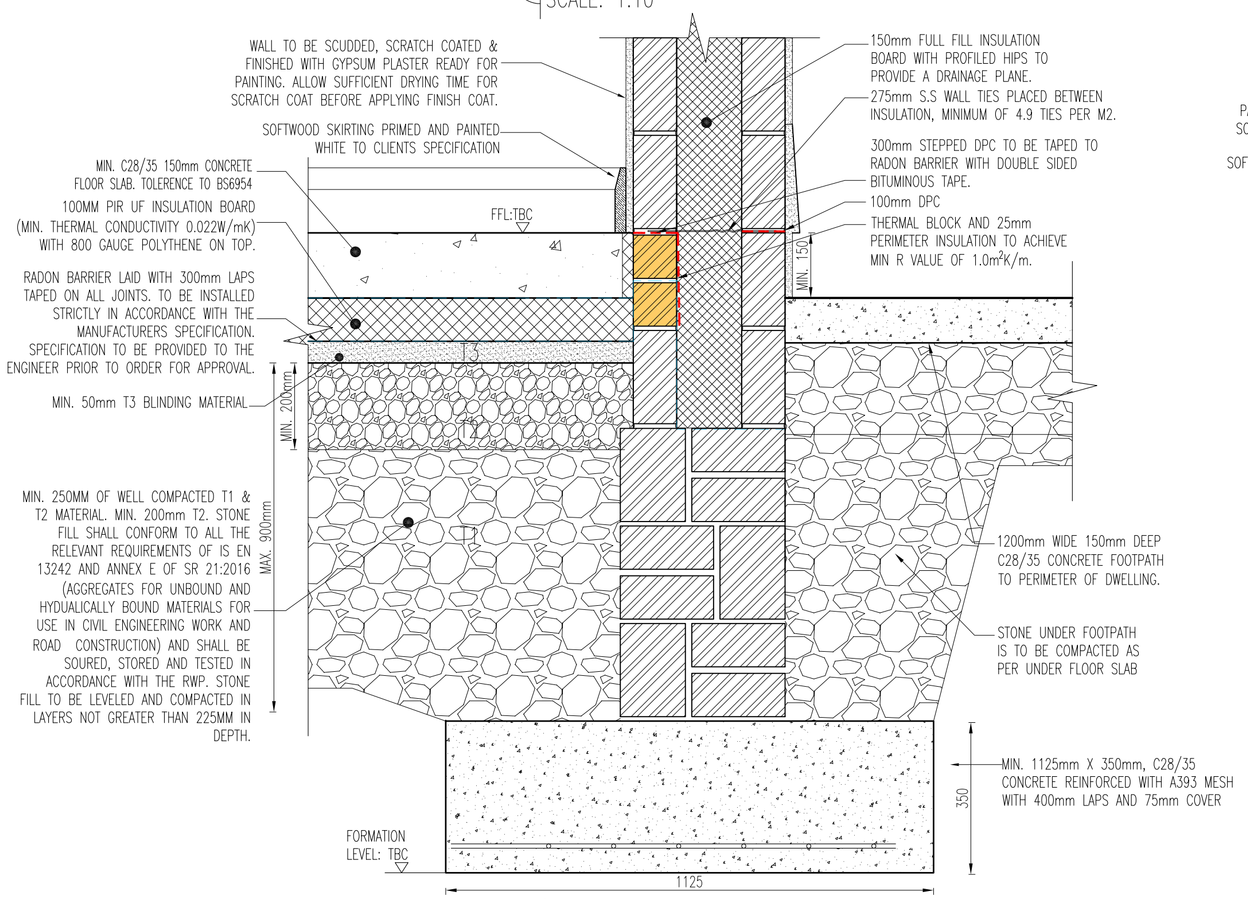

DETAIL-01
SCALE: 1:10

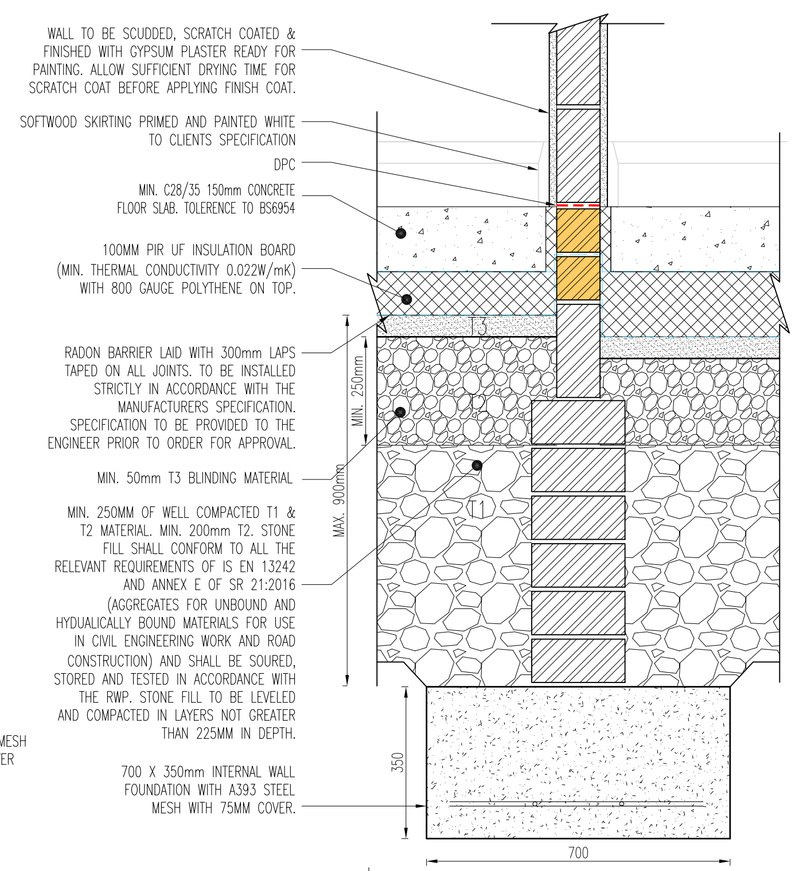

DETAIL-06
SCALE: 1:10

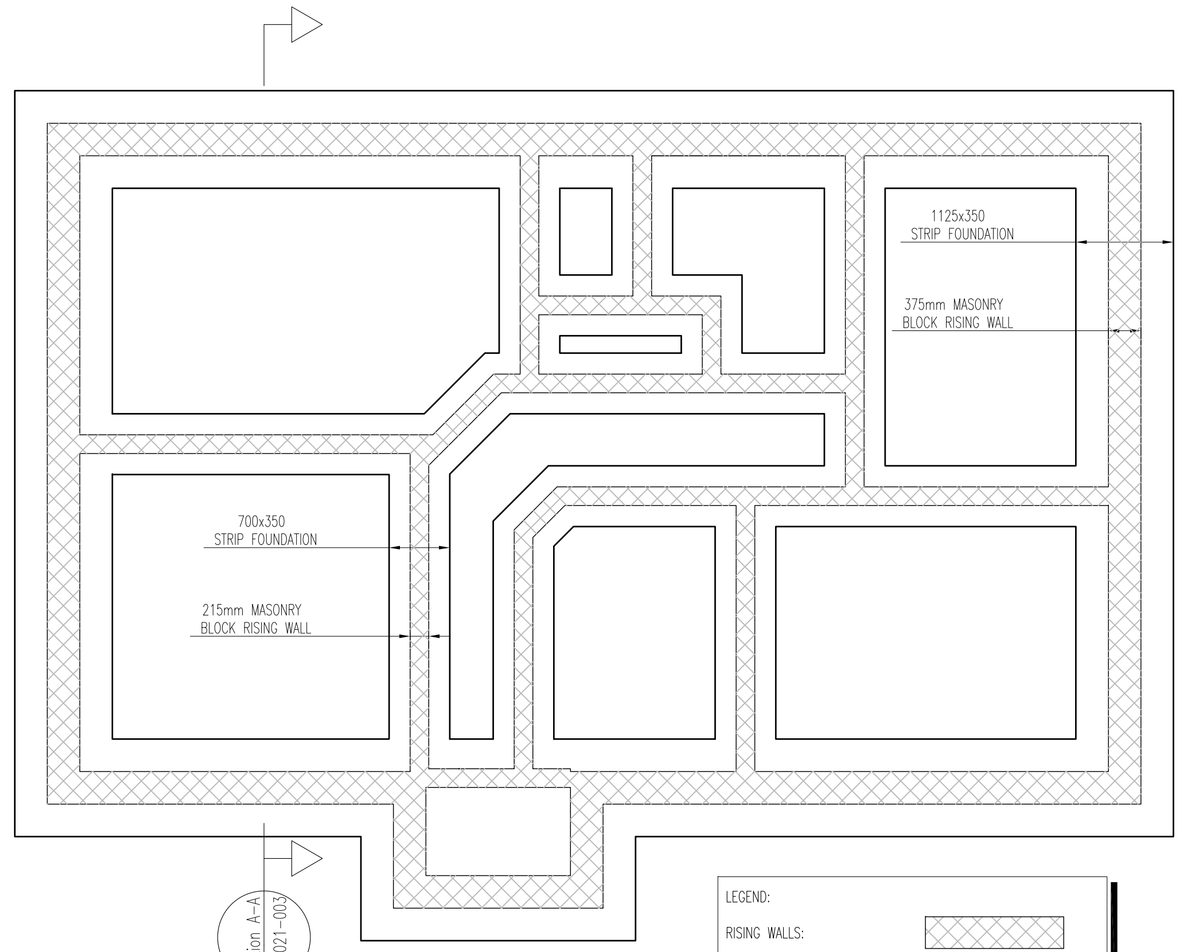

FOUNDATION LAYOUT PLAN
1:50

LEGEND:

RISING WALLS:

TOP OF CONCRETE:
TO BE CONFIRMED ON SITE

T.O.C: TBC

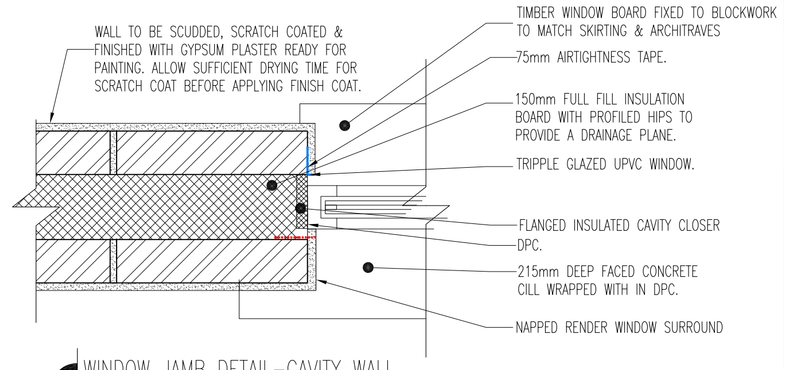

WINDOW JAMB DETAIL-CAVITY WALL
SCALE: 1:10

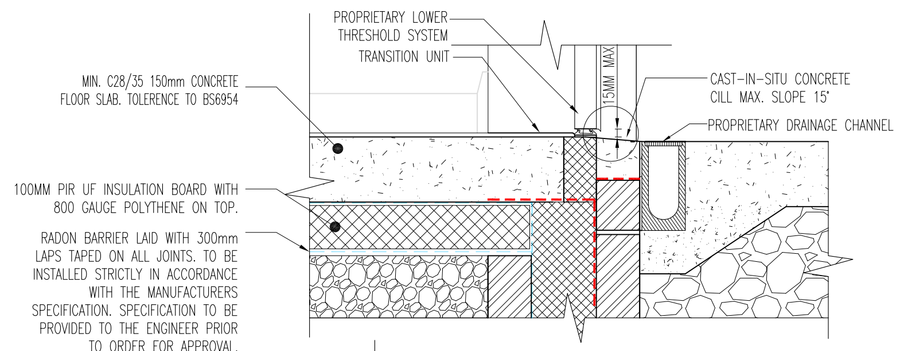

LEVEL ACCESS THRESHOLD
SCALE: 1:10

DO NOT SCALE FROM THIS DRAWING. USE FIGURED DIMENSIONS IN ALL CASES VERIFY DIMENSIONS ON SITE AND REPORT ANY DISCREPANCIES TO THE ENGINEERS IMMEDIATELY. THIS DRAWING IS TO BE READ IN CONJUNCTION WITH THE ENGINEERS SPECIFICATION. THIS DRAWING IS COPYRIGHT AND MAY ONLY BE REPRODUCED WITH THE ENGINEERS PERMISSION.

Rev.No.	Revision/Issue	Initials

AOCA ENGINEERING CONSULTANTS
Portlaoise Office
Lismard House,
Timahoe Road,
Portlaoise,
Co. Laois.
T:+353 (057)8663244
Dublin Office
Unit E8,
Centrepoint Business Park,
Oak Drive,
Dublin 12,
T:+353 (01) 4243035
Web: www.aoca.ie
Email:info@aoca.ie

Client: Laois County Council

Address: Coolroe, Ballybrittas, Co Laois.

Title: Details Sheet 1 of 2

Scale: As Shown	Issue Type: Part VIII Planning
Drawn By: D.C	Revision No: 0
Checked By: D.M	Sheet Size: A1
Date: 28.05.2020	Area:
DWG No: 19-021-P-004	Issued By: Portlaoise