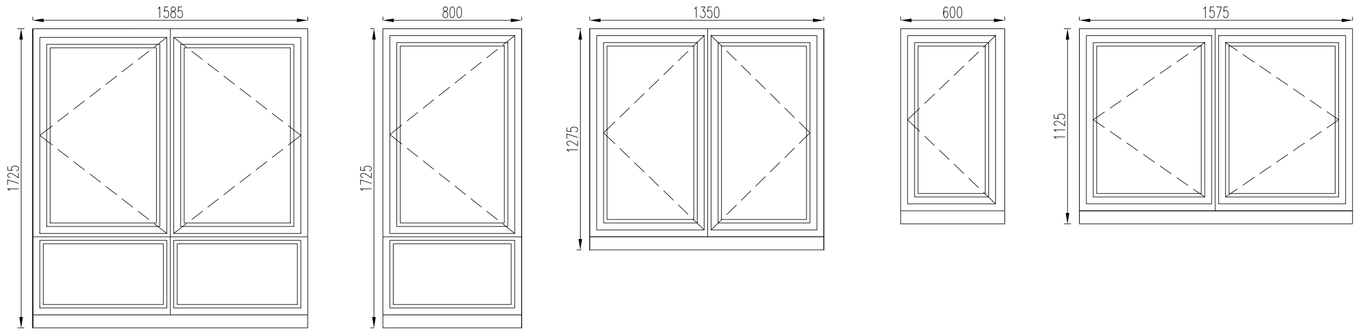

W.T 01
WINDOW TYPE 01 (X2)
1.585mX1.725m
(0.375m ABOVE FFL)

W.T 03
WINDOW TYPE 02 (X3)
0.80mX1.725m
(.375m ABOVE FFL)

W.T 03
WINDOW TYPE 03 (X1)
1.35mX1.275m
(.825m ABOVE FFL)

W.T 04
WINDOW TYPE 04 (X1)
0.60mX1.125m
(.975m ABOVE FFL)

W.T 05
WINDOW TYPE 05 (X1)
1.575mX1.125m
(.975m ABOVE FFL)

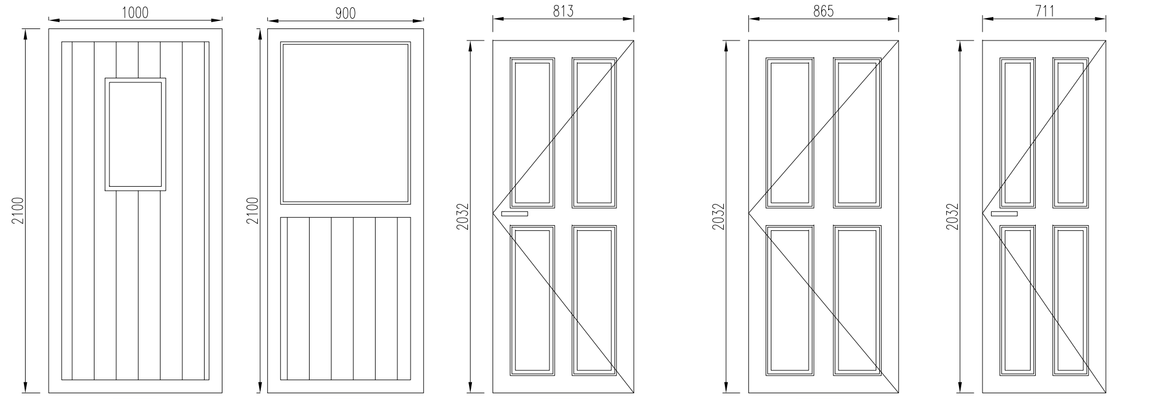

D.T 01
DOOR TYPE 01 (X1)
1.0mX2.100m
(WHEEL CHAIR ACCESSIBLE)

D.T 02
DOOR TYPE 2 (X1)
0.90mX2.100m

D.T 01
INTERNAL DOOR TYPE 1(X4)
2.032mX0.813m

D.T 02
INTERNAL DOOR TYPE 2(X4)
2.032mX0.865m

D.T 03
INTERNAL DOOR TYPE 3 (X2)
2.032mX0.711m

WINDOW & DOOR SCHEDULE
SCALE 1:25

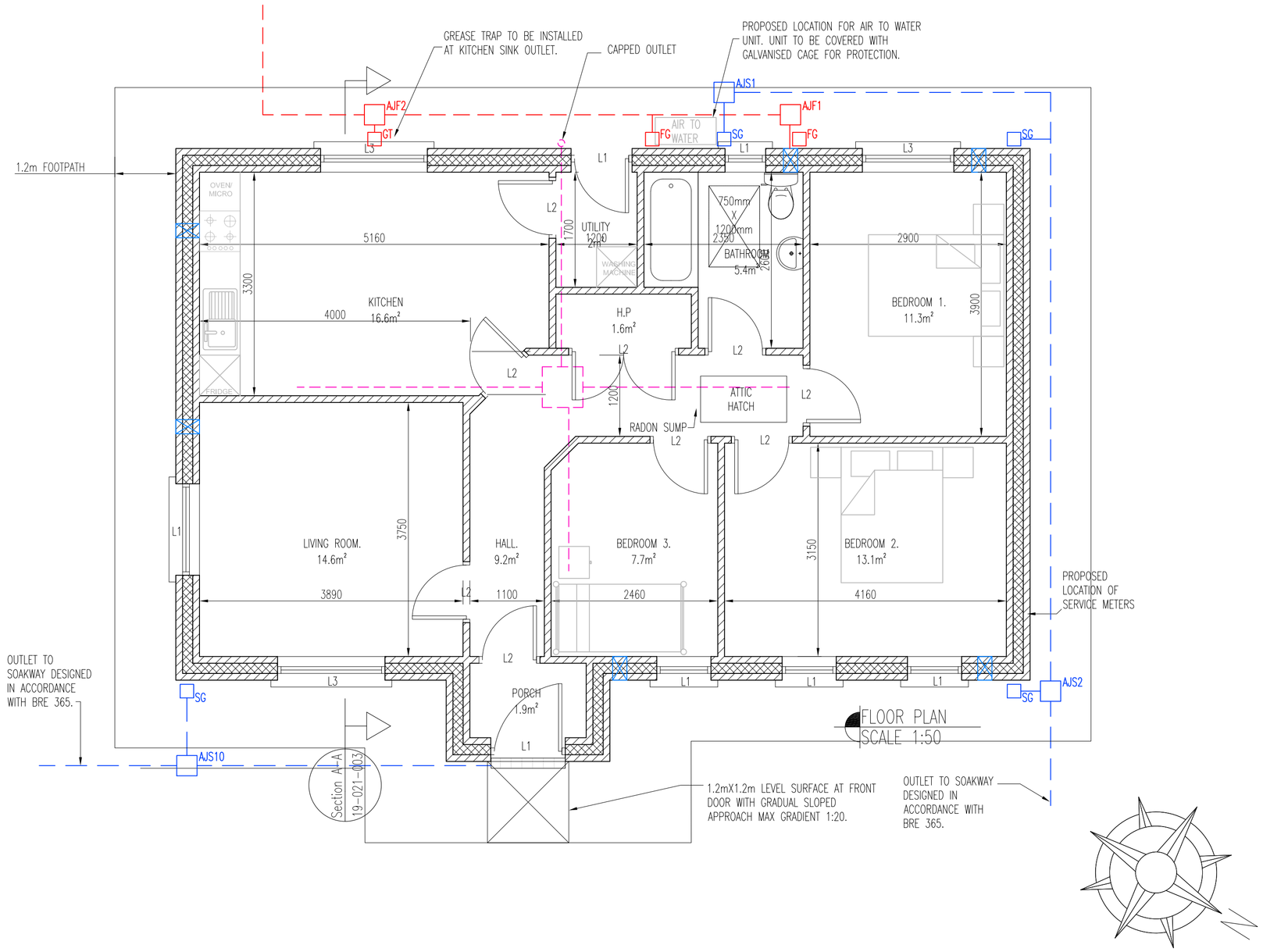

FLOOR PLAN
SCALE 1:50

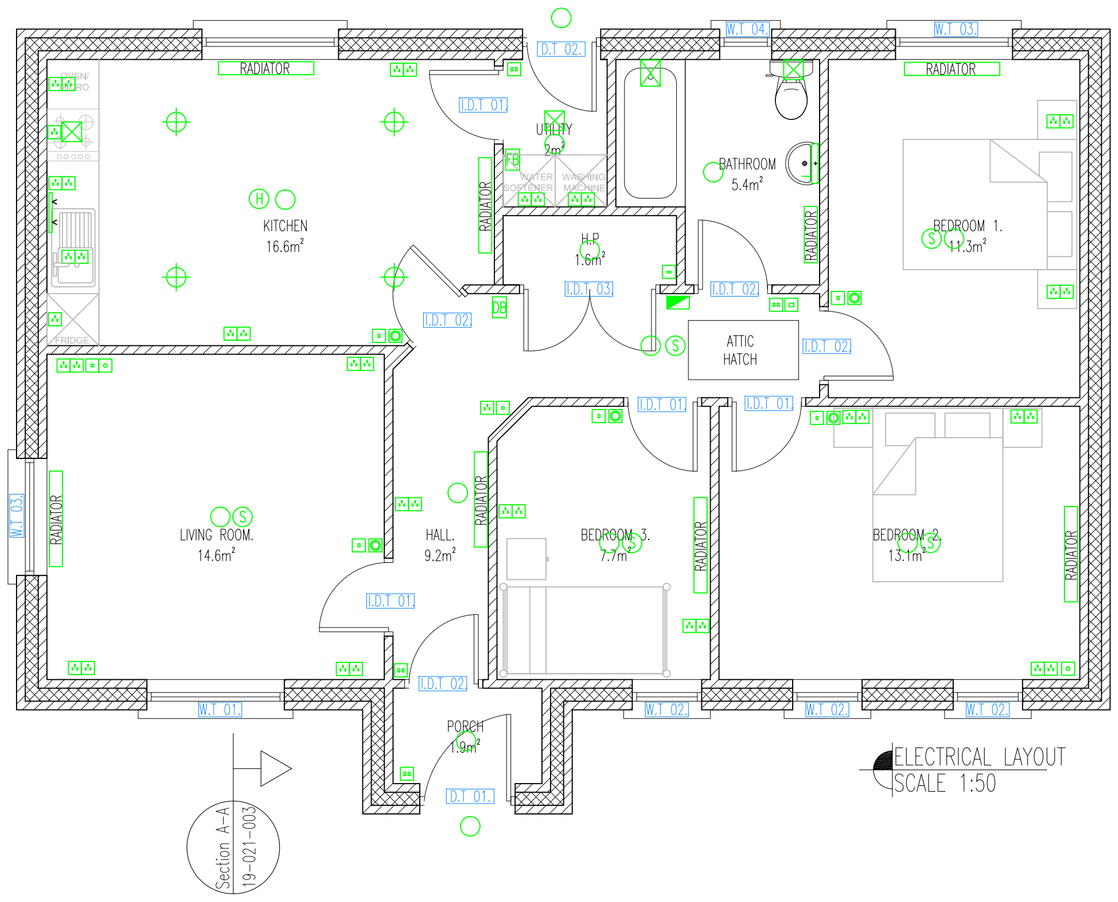

ELECTRICAL LAYOUT
SCALE 1:50

PROPOSED LEGEND:

- 350mm CONCRETE BLOCK CAVITY WALL WITH 150mm FULL FILL PIR INSULATION BOARD WITH PROFILED HIPS TO PROVIDE A DRAINAGE PLANE INCLUDING CORNER FORMS PRODUCED BY MANUFACTURER.
- 100mm CONCRETE BLOCKWORK WALL
- LOCATION OF 150MM AIR VENTS
- LEVEL ACCESS ACO DRAIN (ACO)
- RADON SUMP AND EXTRACT PIPE

LINTEL SCHEDULE

L1	100x65mm PRESTRESSED CONCRETE LINTEL OUTER LEAF. 100x65mm PRESTRESSED CONCRETE LINTEL INNER LEAF.
L2	100x65mm PRESTRESSED CONCRETE LINTEL.
L3	100x65mm PRESTRESSED CONCRETE LINTEL OUTER LEAF. 100x215mm PRESTRESSED CONCRETE LINTEL INNER LEAF.

NOTE:
GROUP 1 MASONRY UNITS CONFORMING TO I.S. EN 771-3. THE DECLARED MEAN COMPRESSIVE STRENGTH FOR GROUP 1 MASONRY UNITS SHOULD BE 7.5N/MM2 (DRY STRENGTH TO I.S. EN 772-1).

NOTE:
1. 275mm STAINLESS STEEL WALL TIES TO BE PLACED MINIMUM OF 4.9 TIES PER M2- MIN. 450mm VERTICAL AND HORIZONTAL CENTERS. WALL TIES TO BE PLACED AT 225mm CENTERS ADJACENT DOOR/WINDOW OPE. CONTRACTOR TO INFORM ENGINEER OF PROPOSED WALL TIE FOR APPROVAL.
2. ALL STEELWORK TO BE IN ACCORDANCE WITH THE NATIONAL STRUCTURAL STEELWORK SPECIFICATIONS (N.S.S.S.).
3. ALL STEELWORK TO BE GRADE S275 TO B.S. EN 10025 UNLESS NOTED OTHERWISE.
4. ALL STEEL BEAMS SUPPORTED BY MASONRY WALLS SHOULD BEAR ONTO A GRADE C28/35 MASS CONCRETE PADSTONE WHICH DIMENSIONS SHALL BE MIN. 440xWALL WIDTHx215mm

ELECTRICAL NOTES:
1. PVC ELECTRICAL FITTINGS THROUGHOUT.
2. ALLOW FOR ALARM CONTACTS ON ALL DOORS AND WINDOWS.
3. ALL RADIATORS ALUMINIUM AND TO BE SIZED AND SUITABLY EFFICIENT TO WORK WITH AIR TO WATER UNIT.
4. DWELLING TO BE ZONED BY ROOM.

FINISHES
1. CONCRETE ROOF TILE TO CLIENTS SPECIFICATION.
2. DRY FIX CONCRETE RIDGE CAPPING TO MATCH TILE. TO BE FIXED IN ACCORDANCE WITH MANUFACTURERS SPECIFICATION.
3. EXTERNAL RENDER TO BE NAPPED PLASTER FINISH. PAINTED COLOUR TO CLIENTS SPECIFICATION.
4. DEEP FACE CONCRETE WINDOW SILLS ARE TO THE PROVIDED EXTERNALLY.
5. WHITE TRIPPLE GLAZED PVC WINDOWS AS PER WINDOW SCHEDULE.
6. PVC FASCIA, SOFFIT, GUTTERS AND DOWNPIPES COLOUR TO CLIENTS SPECIFICATION.
7. PENDANT FITTINGS AS PER ELECTRICAL LAYOUT.
8. SKIRTING AND ARCHITRAVES TO BE SOFTWOOD THROUGHOUT, PRIMED, SANDED AND FINISHED IN WHITE.
9. ALLOW FOR STEPPED ATTIC HATCH ACCESS AND PLATFORM WITH INSULATED HOOD IN HALLWAY. ALLOW FOR 10m² RAISED WALKWAY T&G CHIPBOARD, INSTALLED TO MANUFACTURERS SPECIFICATIONS. ALSO ALLOW FOR ELECTRICAL SUPPLY FOR LIGHTING AND SOCKETS IN ATTIC.
10. KITCHEN, UTILITY UNITS AND WARDROBES TO CLIENTS SPECIFICATION.
11. HEATING SYSTEM TO BE 9KW AIR TO WATER MIN EFFICIENCY TBC
12. BATHROOM SANITARY WARE TO CLIENTS SPECIFICATION.
13. BATHROOM TO BE TILED FLOOR AND FLOOR TO CEILING.
14. INTERNAL PAINTING-2 COATS OF WHITE BASE COAT EVERYWHERE.
15. ALLOW FOR LEVEL ACCESS TO FRONT DOOR OF DWELLING, TO COMPLY WITH TECHNICAL GUIDANCE DOCUMENT M.
16. 1200mm CONCRETE FOOTPATHS TO PERIMETER OF PROPERTY.

WINDOW NOTES:
1. ALL WINDOWS TO BE TRIPPLE GLAZED WHITE UPVC WINDOWS. TO ACHIEVE A MAX. U-VALUE OF 1.4 W/M2K OR BETTER.
2. EXTERNAL FRONT DOOR TO BE COMPOSITE DOOR, REAR DOUBLE DOOR TO BE PVC. TO ACHIEVE A U-VALUE OF 1.4 W/M2K OR BETTER. COLOUR AND EXACT SPEC TO CLIENT DETAILS.
3. ALL WINDOWS AND DOOR TO CLIENTS SPECIFICATION AND TO BE APPROVED BY CLIENTS PRIOR TO ORDERING.
4. ALL INTERNAL DOORS TO BE A SOLID WHITE ENGINEERED DOORS. UNLESS STATED OTHERWISE BY THE CLIENT.
5. ALL GLAZING WITHIN 800mm OF FINISHED FLOOR LEVEL SHOULD BE IN ACCORDANCE WITH THE RECOMMENDATIONS OF BS 6262 Part 4. AND PART K & M OF THE BUILDING REGULATIONS. ANY WINDOW PANELS LOWER THAN 800MM ABOVE FINISHED FLOOR LEVEL TO BE LAMINATED GLASS.

ADDITIONAL NOTES:
1. THIS DRAWING IS TO BE READ IN CONJUNCTION WITH ALL OTHER APPROPRIATE DRAWINGS AND SPECIFICATIONS.
2. DO NOT SCALE, USED FIGURED DIMENSIONS ONLY.
3. THE CONTRACTOR IS TO CHECK ALL DIMENSIONS ON SITE PRIOR TO COMMENCEMENT OF THE WORKS AND ADVICE THE CONSULTANT IMMEDIATELY OF ANY DISCREPANCIES.
4. ALL WORKS ARE TO BE CARRIED OUT IN COMPLIANCE WITH CURRENT BUILDING REGULATIONS, LOCAL AUTHORITY REQUIREMENTS AND GOOD PRACTICE.
5. THE CONTRACTOR IS TO ADVISE THE CONSULTANT IN A TIMELY MANNER OF ANY ADDITIONAL INFORMATION OR DETAILS REQUIRED TO CONSTRUCT THE WORKS.
6. ALL EXISTING LEVELS ARE TO BE CONFIRMED ON SITE.
7. REINFORCED RADON MEMBRANE TO BE INSTALLED TO MANUFACTURERS SPECIFICATION AND CURRENT BUILDING REGULATIONS. FOOTINGS FOR INTERNAL BLOCK WALLS TO INCORPORATE GAPS TO ALLOW POSSIBLE RADON TO PASS THROUGH.

ELECTRICS LEGEND:

- CARBON MONOXIDE ALARM
- DB — DOOR BELL
- DOWN LIGHT
- ELECTRIC COOKER
- ELECTRIC SHOWER
- EXTRACTOR FAN
- FUSE
- FB — FUSE BOARD
- H — HEAT DETECTOR
- HEATING CONTROL/TIMER
- ISOLATION SWITCH
- LIGHT SWITCH (SINGLE)
- LIGHT SWITCH (DOUBLE)
- LIGHT SWITCH (TRIPLE)
- LIGHTING FIXTURE
- PHONE SOCKET (SINGLE)
- PHONE SOCKET (DOUBLE)
- SHAVING LIGHT
- S — SMOKE DETECTOR
- SOCKET (SINGLE)
- SOCKET (DOUBLE)
- THERMOSTAT
- TV SOCKET
- WORKTOP LIGHTING
- RADIATOR — RADIATOR
- W.T 00 — REFER TO WINDOW SCHEDULE

DO NOT SCALE FROM THIS DRAWING. USE FIGURED DIMENSIONS IN ALL CASES VERIFY DIMENSIONS ON SITE AND REPORT ANY DISCREPANCIES TO THE ENGINEERS IMMEDIATELY. THIS DRAWING IS TO BE READ IN CONJUNCTION WITH THE ENGINEERS SPECIFICATION. THIS DRAWING IS COPYRIGHT AND MAY ONLY BE REPRODUCED WITH THE ENGINEERS PERMISSION.

Rev.No.	Revision/Issue	Initials

AOCA ENGINEERING CONSULTANTS
Portlaoise Office
Lismard House,
Tlimahoe Road,
Portlaoise,
Co. Laois.
T:+353 (057)8663244
Dublin Office
Unit E6,
Centrepoint Business Park,
Oak Drive,
Dublin 12.
T:+353 (01) 4243035
Web: www.aoca.ie
Email:info@aoca.ie

Client: Laois County Council

Address: Coolroe, Ballybrittas, Co Laois.

Title: Floor Plans and Window Schedule

Scale: As Shown	Issue Type: Part VIII Planning
Drawn By: D.C	Revision No: 0
Checked By: D.M	Sheet Size: A1
Date: 28.05.2020	Area:
DWG No: 19-021-P-002	Issued By: Portlaoise